Government of **Western Australia**
Department of **Commerce**
Energy*Safety*

ELECTRICAL INCIDENT REPORT
VOLUME 1

BUSHFIRE
180 GRANITE ROAD
PARKERVILLE
WESTERN AUSTRALIA
12 JANUARY 2014

Report prepared by:

Energy*Safety* WA
EIS2014-0080

2 December 2014

Parkerville Bushfire Report - Final.doc

TABLE OF CONTENTS

Volume 1

1. SUMMARY

On 12 January 2014, the Department of Fire & Emergency Services (DFES) notified Energy*Safety* that an established and fast moving bushfire, possibly ignited by electricity, was underway in the Parkerville region.

The bushfire started around 10:45 hours at 180 Granite Road Parkerville, near the corner of Johnston and Granite Roads. It moved rapidly in an easterly direction, along the Jane Brook Valley, towards Stoneville (Figure 1).

DFES Fire Investigators and the WA Police (WAPOL) Arson Squad Fire Investigators, using eye witness accounts and back tracking, were able to identify the area of fire origin at the base of a fallen privately owned wooden electricity pole at 180 Granite Road, Parkerville.

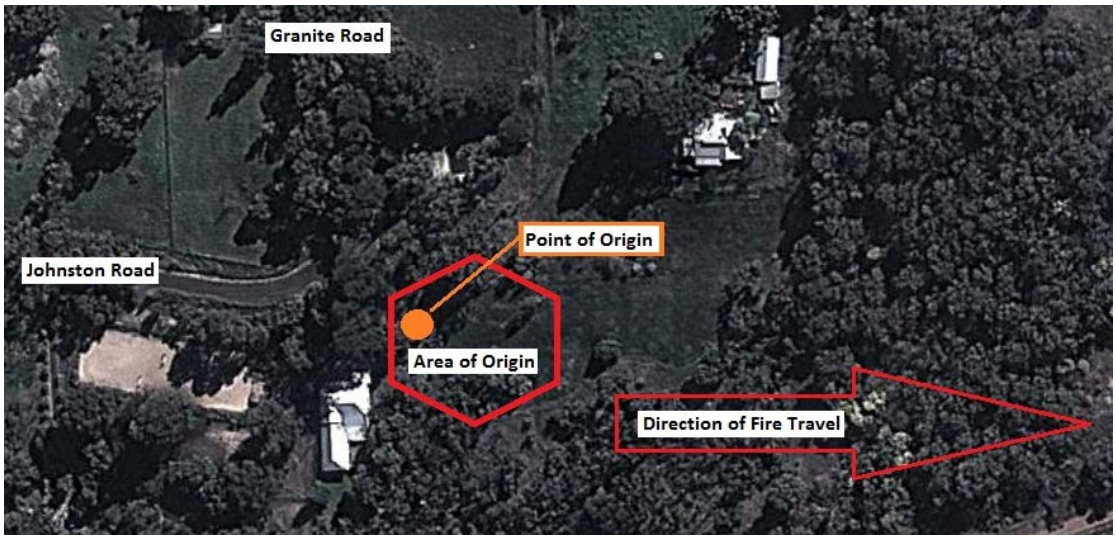

Figure 1 - The satellite image shows the point of fire origin and the bushfire which travelled east towards Stoneville.

DFES notified Energy*Safety* at 13:24 hours on 12 January 2014 and requested assistance to establish the cause of the bushfire. Energy*Safety* inspectors Mr Todd Bell, Manager Electrical Inspection (Supply) and Mr Gary Scott, Manager Electrical Inspection (Utilisation) attended site with DFES and WAPOL fire investigators at 14:45 hours on the same day. Inspectors Bell and Scott are designated Inspectors (Electricity) under the *Energy Coordination Act 1994.* The inspection and investigation was conducted under the authority of s.14 of this Act.

Energy*Safety's* investigation found that the private wooden electricity pole at 180 Granite Road, Parkerville fell in a westerly direction. The pole failed below the ground line due to fungal decay and damage by termites. The pole supported Western Power's 415 volt 3 phase ac aerial service cable, the property's main switchboard and Western Power's meter. The pole is referred to as a point of attachment (PA) pole in this report.

As the PA pole fell, the property owner's underground submains cable was pulled through the cable hole at the base of the main switchboard enclosure. This exposed the conductors' single insulation to the sharp metallic edges of the hole, damaging the insulation. This caused a short-circuit fault resulting in arcing. Hot molten metal

globules from the conductors and the metal enclosure dropped to the ground, igniting the dry vegetation around the base of the pole. No other conclusion is supported by the available evidence.

The fire burnt approximately 392 hectares of bushland resulting in the destruction of 57 homes and seven outbuildings/sheds/carports and pergolas. A further six homes were partially damaged.

Energy*Safety's* investigation found that electricity to the property was first connected on 1 February 1970. From this information it was concluded that the PA pole was installed approximately 40 years ago. The PA pole failed at approximately 170mm below the ground-line. The loss of ground-line strength was due to extensive removal of wood fibre by termites and fungal decay.

Western Power's overhead distribution network in Johnston and Granite Roads, Parkerville and its aerial service cable supplying 180 Granite Road, Parkerville had been upgraded during the seven months prior to the bushfire. There was no evidence found that this work caused the PA pole to fail.

The full report comprises two volumes and provides the details of Energy*Safety's* investigation into the cause of the bushfire as follows:

- Volume 1 – This document; and
- Volume 2[1] – Supporting documentation, including:
    - TimberED Services Pty Ltd – Report on Pole Failure at Parkerville 12 January, 2014;
    - TimberED Services Pty Ltd – Report on Cable Loads on Pole Failure at Parkerville 12 January, 2014;
    - Davis Consultants – Report into Inspection of Consumer's Point-of-Supply Power Pole from 180 Granite Road, Parkerville to Determine if Termite or Fungal Activity was Involved in its Structural Failure;
    - Photographs taken of the PA pole at site by Energy*Safety*;
    - Videos and photographs taken of the examination of the PA pole at Energy*Safety's* Cannington Office;
    - TimberED Services Pty Ltd - Opinion on pole inspection methods;
    - Pamphlet – Private overhead power lines - published January 2013 by Energy*Safety;*
    - Pamphlet – Private overhead power lines - published September 2014 by Energy*Safety;*
    - Extract - Western Power operational work practices – consumer poles and meter poles;
    - Western Power field instruction 6.2 Inspection and support prior to commencement of work; and
    - CUSA Activity[2] form for 180 Granite Road, Parkerville (personal information redacted).

[1] Volume 2 is available on request from Energy*Safety* for the cost of production.
[2] The CUSA Activity form is used by the Western Power contractor to record the customer service activity.

2. EXAMINATION AND TESTS

Energy*Safety* investigators arrived at the DFES Incident Control Point located at Parkerville Recreation Ground, Seaborne Street, Parkerville at 14:45 hours on 12 January 2014.

At approximately 15:00 hours, the DFES fire investigator contacted Energy*Safety* and Western Power investigators and allowed them to proceed to the area of fire origin.

DFES and WAPOL fire investigators provided Energy*Safety* with a briefing and information they had taken from witnesses, which enabled them to determine the area of fire origin. It was established that DFES Fire Investigator, Station Officer, Andrew Duckworth would be the Investigation Controller.

2.1 Site Inspection

On inspection of the site, where the bushfire allegedly originated, Energy*Safety* inspectors found:

- Located within the area of fire origin was a PA pole which had fallen over. (Figure 2).

- The PA pole had broken at its base and was lying at an angle of approximately 30 degrees to the ground. The pole was held off the ground by an aerial service cable, which had fallen against an adjacent unused steel pole.

- A metallic switchboard enclosure was secured to the PA pole. The metallic enclosure contained the customer's main switchboard, Western Power's branded 415 volt three-phase kWh meter, meter panel and three service protection devices (SPD) fitted with three 30 ampere rewireable fuses (Figure 3).

- The customer's main switchboard consisted of a switchboard panel, main switch, three rewireable fuses rated at 50 amperes (submains protection) and a neutral link with multiple earthed neutral (MEN) connection. The switchboard panel had a large number of cracks and was broken.

- The door of the main switchboard enclosure was lying on the ground near the pole. There was debris (leaves) found inside the main switchboard enclosure and a wasp nest attached to the meter. The electrical equipment inside showed signs of fading from sunlight and water stains.

- A small termite mound was located approximately 1.5 metres from the PA pole.

- The consumer mains cable was installed inside a PVC conduit and secured to the PA pole between the mains connection box at the pole top and the three SPDs in the main switchboard enclosure.

- The jarrah PA pole had been damaged by the bushfire at its base, affecting both above and below ground sections. The base of the pole was in poor condition and had been burnt.

- The 4-core and earth insulated and sheathed submains cable was installed underground in conduit between the main switchboard and a distribution board, located near the house. The submains conduit entered the main switchboard through a hole at the bottom of the enclosure. The conduit was not secured (by gland adaptor) to the enclosure (Figure 4).

- The conduit protecting the submains cable had pulled away from the main switchboard enclosure.

- The single-insulated submain conductors were damaged where they entered the bottom of the metallic enclosure and beyond the point where the cable sheath had been removed.

- Signs of arcing were observed on the conductors and around the cable hole where the submain cable entered the bottom of the metallic enclosure (Figure 7).

- Damage to the insulation and arc marks were observed on the white and blue phase conductors and green earthing conductor of the submain cable, at the point where they entered the enclosure.

- The earth electrode, for the main switchboard enclosure, consisted of a star picket driven into the ground at the base of the PA pole. It was intact but showed signs of galvanic corrosion at ground level (Figure 5).

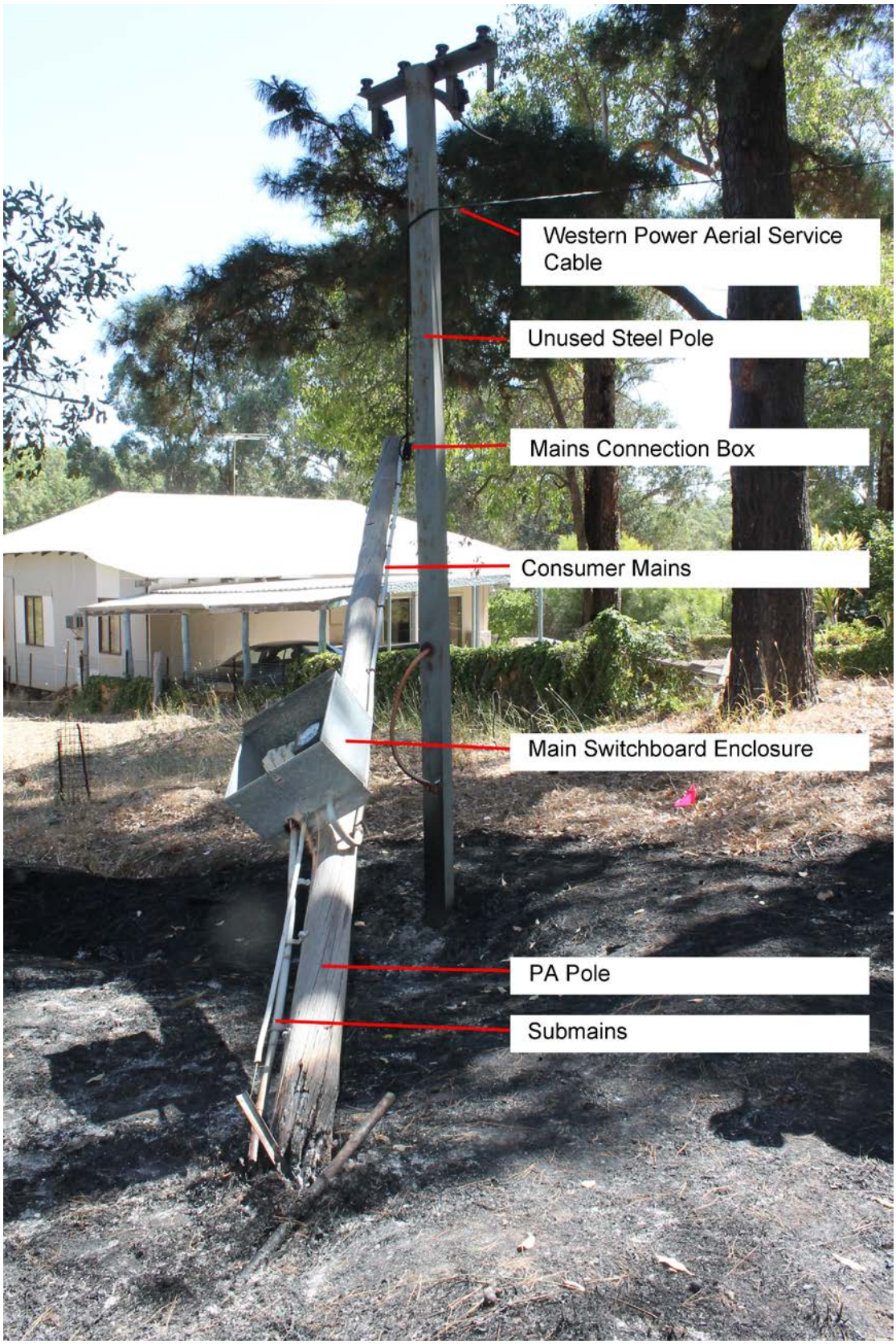

Figure 2 - Photograph taken by Energy*Safety* on 12 January 2014 of the property owner's PA pole as it was found during the initial site inspection.

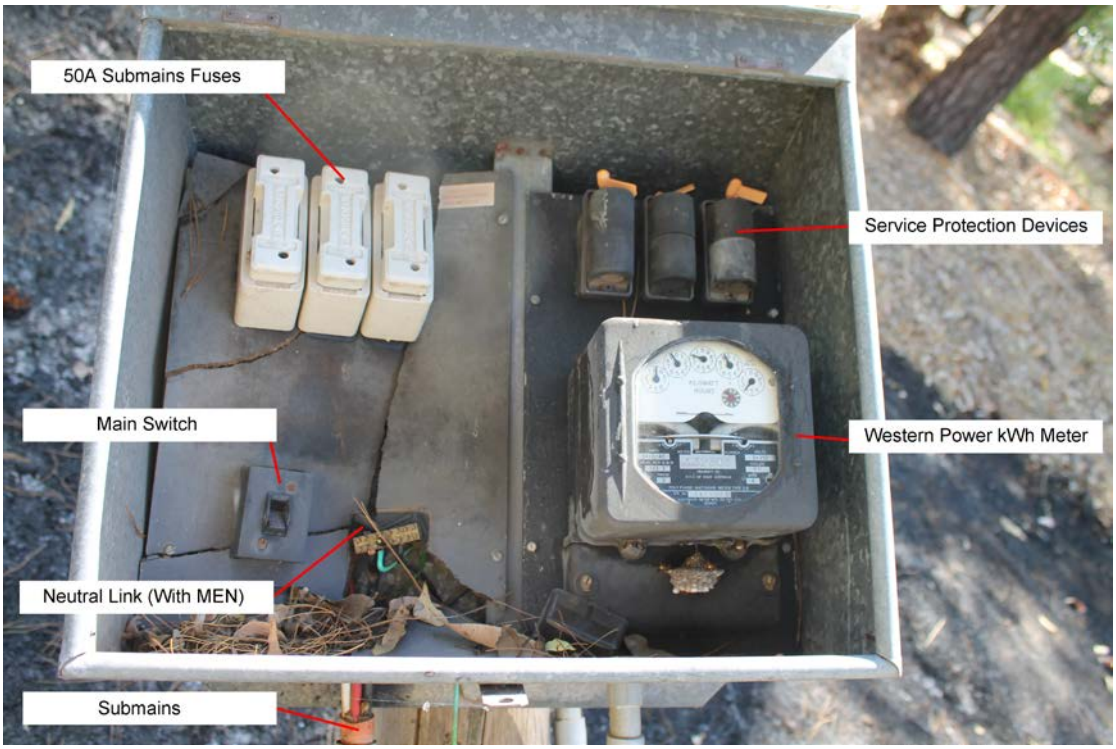

Figure 3 - Photograph taken by Energy*Safety* on 12 January 2014 of the site main switchboard, showing the effects of exposure to the environment and damage to the main switchboard panel (left)

Figure 4 - Photograph taken by Energy*Safety* on 12 January 2014 of the site main switchboard, showing the submains cable and conduit that had pulled out of the main switchboard enclosure when the pole fell. Note the orange sheath to protect the cables only extends a short distance past the end of the conduit.

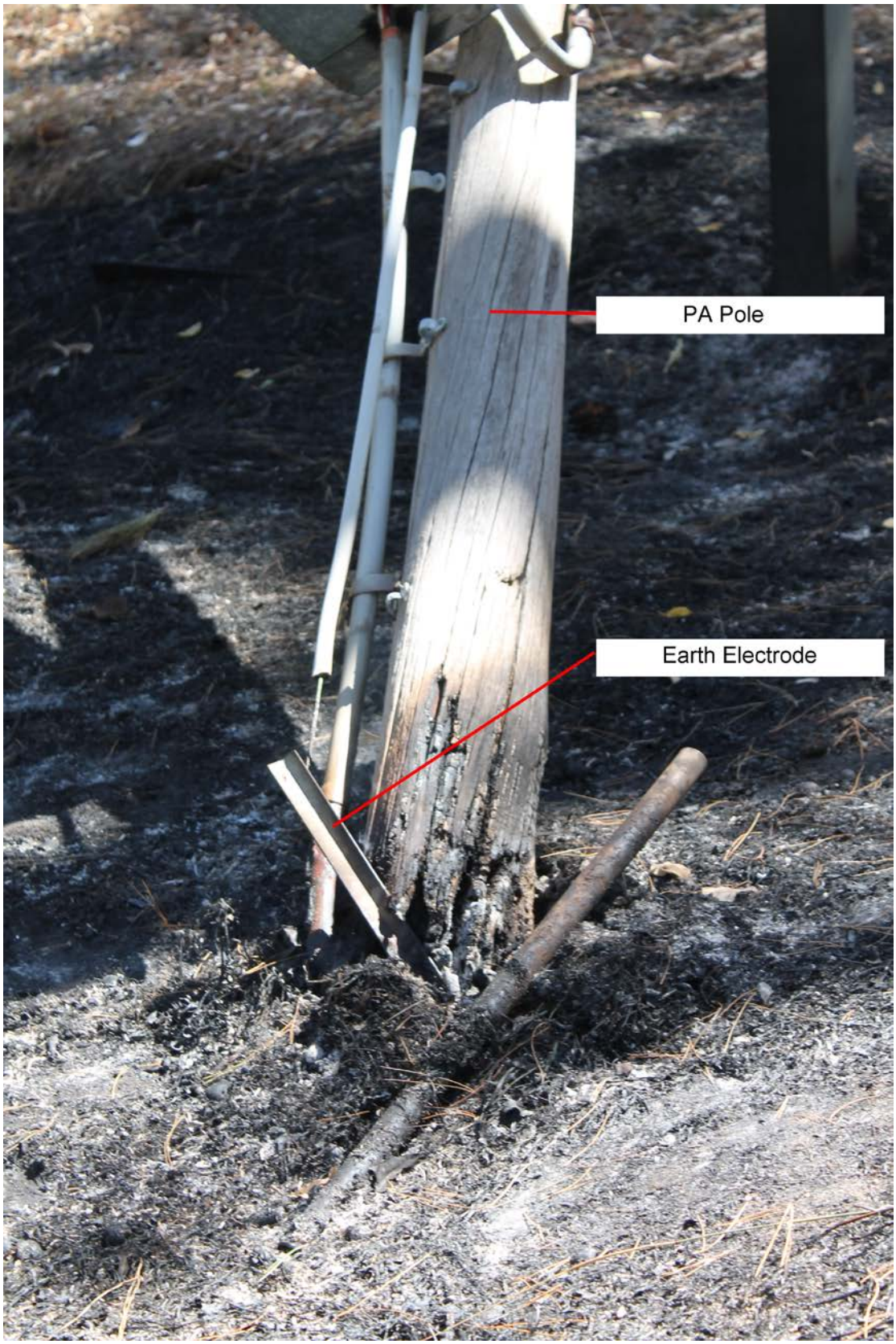

Figure 5 - Photograph taken by Energy*Safety* on 12 January 2014 of the base of the fallen PA pole and the damage caused by the bushfire.

2.2 Electrical Tests

Electrical tests were carried out to determine if any of the protection devices had operated and whether there were any faults with the electrical installation at the main switchboard.

The electrical tests established:

1. A short-circuit had occurred on the submains cable between the white and blue active conductors at the point where the submains cable to the distribution board emerged from the main switchboard enclosure.

2. The Service Protection Device (SPD) active red and white phase 30 ampere fuses had both operated.

3. The submains 50 ampere fuses had not operated.

4. The consumer mains active conductors did not maintain the same phase sequence between the meter and the main switch, resulting in the colour coding of the active conductors changing between the line side of the meter and the load side of the main switch (Figure 6).

5. This change in sequence accounted for the SPD active red and white fuses operating when the submains short-circuit fault occurred on the white and blue phase conductors. This had no bearing on the cause of the fault.

On completion of the site examination and testing it was established from the evidence available that a short-circuit occurred between the main switchboard enclosure and the submains blue and white active conductors.

2.3 Evidence Removed from Site for Examination

The following items were obtained by DFES from the site and provided to Energy*Safety* for examination and analysis:

1. The toppled wooden jarrah PA pole;
2. Main switchboard enclosure and internal components;
3. Conduits fixed to the PA pole (including the enclosed cable conductors);
4. Mains connection box;
5. Earth electrode; and
6. Western Power's aerial service cable between Western Power's termination pole and the PA pole.

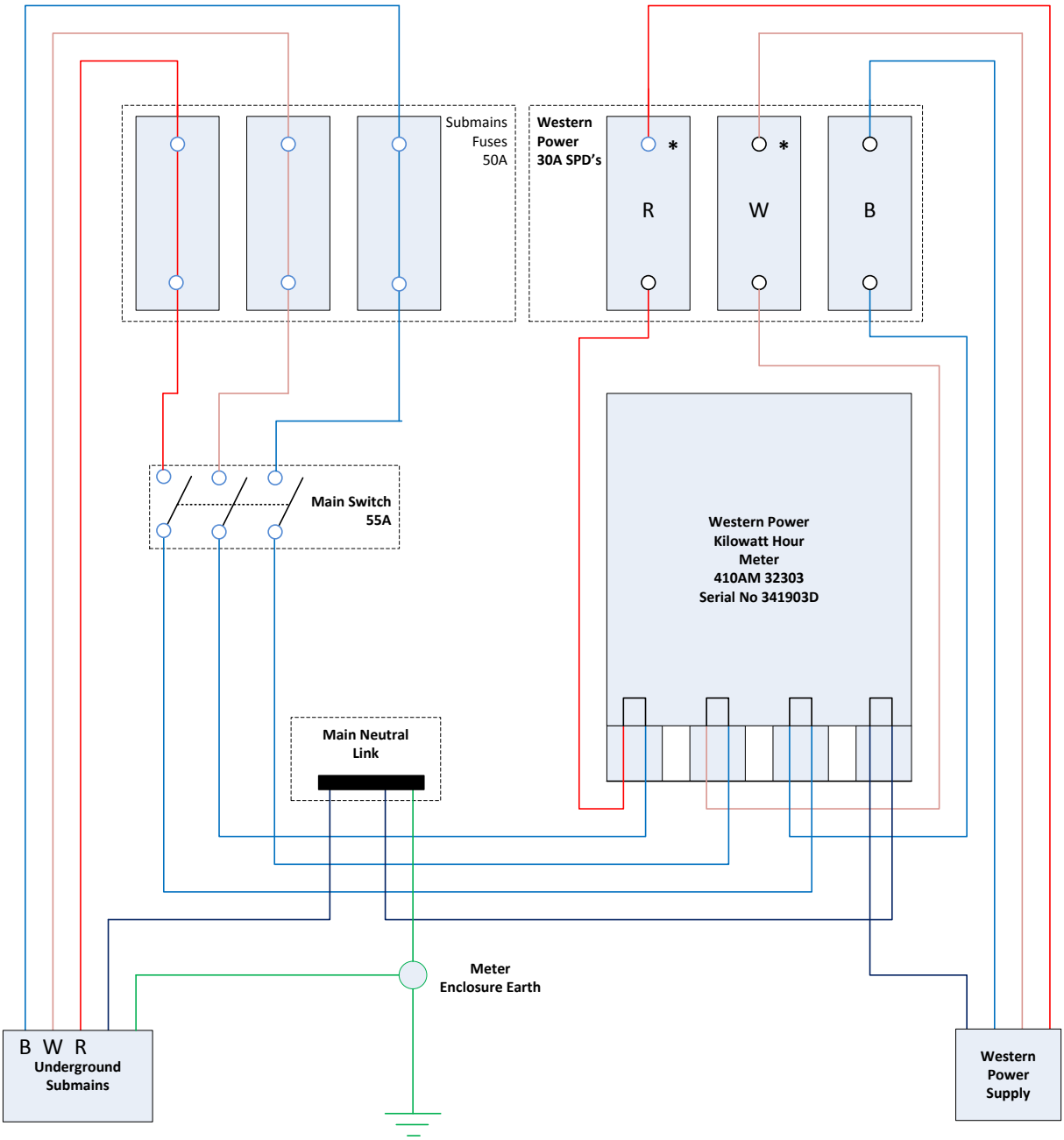

Figure 6 - Main Switchboard Wiring Diagram showing phase conductor colour coding, Brown has been used to show the white phase conductor.
Note: * indicates that SPD fuse operated under short-circuit fault conditions.

3. INVESTIGATION

3.1 Works Performed by Western Power at or Near 180 Granite Road, Parkerville

Western Power and its contractors attended the property at 180 Granite Road, Parkerville on the following occasions for the reasons mentioned:

- February 1970 – The property was initially connected to the distribution network by the State Electricity Commission.

- Prior to 2004 – Western Power's bare LV aerial distribution conductors in Johnston Road were replaced with LV aerial bundled cable (ABC).

- 2006 – Western Power meter reader reported that "the door was broken, box on pole Corner of Johnston – ensure gate closed, don't let bulls out".

- 28 March 2011 - A Western Power Network Officer attended the property in response to the property owner reporting lost power. The officer reported that the Smeaton Road Transformer fuse had failed. Electricity supply was restored.

- 29 September 2011 – A routine 4-yearly inspection of Western Power's poles along Johnston and Granite Roads was carried out.

- 4 June 2012 – An overhead customer service connection inspection was completed.

- 19 July 2013 – As part of Western Power's routine pole and aerial service cable replacement program, a new three-phase cross-linked polyethylene (XLPE) aerial service cable was installed from the PA pole to a Western Power LV distribution termination pole at 180 Granite Road, Parkerville. The 6mm^2 PVC insulated copper aerial service cable and helical preformed termination fittings were replaced with 6mm^2 XLPE insulated conductors and new terminations.

- 19 July 2013 – Replaced the LV distribution termination pole (number 252260) supporting the overhead service mains cable for 180 Granite Road at the corner of Granite and Johnston Road, Parkerville.

- 11 November 2013 – An annual inspection was conducted to ensure adequate vegetation clearances were maintained from power lines. There was no record of any vegetation encroaching inside the clearance zones.

- 22 November 2013 – A Western Power Network Officer attended the property in response to the property owner reporting loss of supply. When the officer arrived on site the property owner advised him that a circuit breaker at a distribution board was reset and the electricity supply restored.

- 24 December 2013 – Last bi-monthly meter reading carried out.

- 10 January 2014 – An LV distribution pole (number 252261) adjacent to termination pole (number 252260) at the corner of Johnston and Granite Road, Parkerville was replaced.

3.2 Witnesses

There were no witnesses that claim to have seen the fire start. However witnesses provided relevant information on events leading up to and on the day of the bushfire.

3.2.1 Property Owner

The owner of 180 Granite Road, Parkerville was home when the fire started on 12 January 2014. She did not witness the fire start but received a telephone call from her neighbour alerting her that a fire was burning in her paddock. Relevant extracts of her statement are as follows:

- *"I was surprised to find out that our meter pole[3] had fallen over. We have never had any problems with the pole".*
- *"To the best of my knowledge the pole has never been hit [sic] a vehicle".*
- *"About 5 years ago we had a couple of cows and a bull in the paddock and before that a few sheep".*
- *"I was aware that Western Power did put up some new poles along the street, but I could not tell exactly when, only a few weeks before the fire".*

After providing this statement the property owner advised Energy*Safety* that she had never received any notification or been informed about any defects or issues with the switchboard or any other aspect of the PA Pole.

3.2.2 Property Owner's Elder Son

The owner's elder son had resided at 180 Granite Road Parkerville from 1974 to 1985. He was not at the property when the fire started on 12 January 2014. He arrived late in the afternoon. Relevant extracts of his statement are as follows:

- *"I am aware of the consumers pole[4] located at 180 Granite Road, and have known of its existence for at least twenty years".*
- *"I believe the pole has been installed at the property for over thirty years. I cannot give a certain date of its installation".*
- *"My family has played "Frisbee Golf" in the lower paddock for many years, this involves how many shots it takes to hit the pole with a Frisbee".*
- *"The consumers pole was one of the holes".*
- *"I cannot remember if there was a cover on the meter box[5]".*
- *"I am aware that my father had the pole installed as the existing steel pole nearby was not considered to comply with the standards at the time".*
- *"I am not aware of any vehicles or machinery ever making contact with the pole".*
- *"I am not aware of any problems with the pole or associated electrical equipment since it was put in".*
- *"I am not aware of any work that has been done on the pole or its associated electrical equipment".*
- *"I am aware that there was work carried out by Western Power in the area recently. I am aware they disconnected and reconnected the power. I am not aware of what the work involved".*

[3] This report refers to "meter pole" as a "PA pole".
[4] This report refers to "consumers pole" as a "PA pole"
[5] This report refers to "meter box" as the "main switchboard"

- *"The neighbour …. would occasionally mow the area around the pole and fence as my mother's ride on mower is broken".*
- *"There has been a number of electricians carry out work at the property over the years".*
- *"I am aware there are regular power outages to the property and surrounding properties. I am not aware if the meter box was checked as a result".*

3.2.3 Property Owner's Younger Son

The owner's younger son resides at 180 Granite Road, Parkerville but was away from the property when the fire started. He arrived at the property at around 11:00 hours on 12 January 2014 and assisted with fighting the fire. Relevant extracts of his statement are as follows:

- *"We regularly played Frisbee Golf and the power pole was one of the holes".*
- *"The only thing about the pole was that the lid was broken and had been on the ground for some time".*
- *"The pole always appeared to be solid as a rock".*

After providing this statement the younger son when questioned about the main switchboard door advised:

"*The best I can recollect is that it was not on the pole when I returned to Perth, so that's September 2012, and it was lying on the ground in the vicinity of the pole".*

3.2.4 Neighbour

A neighbour resides at the property immediately adjacent to 180 Granite Road, Parkerville. He walked out onto his rear balcony after he noticed thick grey smoke towards the back of his house around 10:45 hours on 12 January 2014. He also tried to put the fire out but it quickly became out of the reach of his hose. Relevant extracts of his statement are as follows:

- *"From where I was standing on my balcony at the rear of the house, my [sic] and looking towards the front I could see flames at the bottom of the power pole".*
- *"The power pole is on my neighbour's property. If you stand at the front of my house it is the neighbouring property to the left hand side".*
- *"I could see the power pole had fallen over".*
- *"The flames were approximately 1 metre away from the bottom of the power pole in the direction towards my fence line".*
- *"At the time I first observed the fire I did not see any persons in the vicinity of the power pole".*

After providing a statement the neighbour when questioned provided the following information:

- He assisted WAPOL fire investigators to mark, with marking flags, the area where he initially saw the fire. The demarcation area was on the property located at 180 Granite Road, Parkerville and the property owner's PA pole was inside this demarcation area.

- He regularly assists his neighbour at 180 Granite Road, Parkerville by cutting the grass with his ride-on lawn mower on their paddock to prevent snakes. He would mow approximately 20 metres in from the boundary line on the neighbour's property and from their driveway along the property boundaries extending to 2/3 of its length towards the rear of his property. This included mowing around the PA pole. He has been mowing the paddock for approximately the last four years. The last time he mowed the paddock was approximately 2 weeks before the bushfire.

- He could not recall the condition of the switchboard, however, the door was not on the ground.

3.2.5 Service Replacement Crew

Witnesses from Western Power's contract line crew stated that they replaced Western Power's termination pole (number 252260) and the aerial service cable between this pole and the PA pole on 19 July 2013. The work crew consisted of a leading hand linesman, three linesmen, linesman apprentice and a crane operator. Extracts of the leading hand, two linesman and linesman apprentice statements, where they relate to the PA pole, are provided below.

3.2.5.1 Leading Hand Linesman

Relevant extracts of the leading hand linesman's statement about the PA pole at 180 Granite Road, Parkerville are as follows:

- *"As we were working on a consumer pole, it had to be checked"*
- *"I dug down around the consumer pole about 200-300mm, I wiped the sand and dirt of [sic] the pole with my gloves".*
- *"The pole looked good, I took a claw hammer and just knocked on the pole from where I dug down to about a metre".*
- *"The pole sounded good to me and I also gave it a little push, it was all good".*
- *"I was happy for us to pull up the services and connected [sic]".*
- *"I did not notice any termite activity on the pole".*
- *"I can't recall the switchboard cover being there or not".*
- *"I [sic] there was something wrong with the pole I would have spoken to the supervisor".*
- *"There had been some [sic] crew where the consumer poles have fallen over when they have been pulling up services"*
- *"We have been told that crew would be suspended if a consumer pole falls over so I make sure that I work to the books [sic]".*
- *"The CUSA form is used when we change a customer service. I complete [sic] the CUSA form in the afternoon on site. I have got no reason to explain why there are wrong boxes ticked on the form".*

3.2.5.2 Linesman (One)

Linesman one assisted in the replacement of the Western Power's termination pole and the removal and replacement of the aerial service cable to the PA pole. Relevant extracts of his statement about the PA pole at 180 Granite Road, Parkerville are as follows:

- *"It was at this point in the bucket that I saw that someone had dug around the consumer pole due to the ground being disturbed"*

- *"I had also notice [sic] that the meter box door was on the meter enclosure, however it wasn't square to the meter box and may have been damaged".*
- *I then checked the consumer pole, I shake the consumer pole at the top. It moved a bit but it was solid, it was ok".*

3.2.5.3 Linesman (Two)

Linesman two assisted in the replacement of the Western Power's termination pole and the removal and replacement of the aerial service cable to the PA Pole. Relevant extracts of his statement about the PA pole at 180 Granite Road, Parkerville are as follows:

- *"I don't recall the meter box door being broken when we carried out the tests".*

3.2.5.4 Linesman Apprentice

The linesman apprentice assisted with the replacement of the Western Power's termination pole. He did not work on the PA pole or aerial service cable. Relevant extracts of his statement about the PA pole at 180 Granite Road, Parkerville are as follows:

- *"I remember seeing …. dig around the consumer pole".*
- *"We had three consumer poles fall over last year".*
- *"It has been drummed into us in our safety meetings to check the poles".*
- *"Supervisors have been getting up there threating us, saying the next person who doesn't check a pole and it falls over is going to be kicked out of here".*
- *"The company is pretty cautious when it comes to consumer poles".*

3.2.6 Western Power Contract Team Leader – Pole Replacement Crew

The Team Leader from the Western Power contract line crew carried out work in Johnston Street, Parkerville on 10 January 2014.

The crew replaced a LV distribution pole (number 252261) adjacent to the Western Power termination pole number (number 252260) to which the aerial service cable for 180 Granite Road, Parkerville was connected. The work crew consisted of a team leader (linesman), three linesmen and a crane operator. At interview the Team Leader stated that his work crew changed pole number 252261 and did not carry out any work on pole number 252260, the aerial service cable or the PA pole at 180 Granite Road, Parkerville.

3.2.7 Meter Reader

A contract meter reader for Western Power carried out bi-monthly meter readings for 180 Granite Road, Parkerville. When questioned he remembers reading the meter at this property four times with the last time being on 24 December 2013. He said it is common for the switchboards not to have doors fitted and there was nothing remarkable about the switchboard.

3.2.8 Operations Manager

An Operations Manager for the Western Power meter reading contractor, when questioned, advised that when a meter reader reads a meter they record the reading

and any comments on a hand-held recorder. The comments section is to record safety and access information for each address. The meter reading and comments are provided to Western Power. There are no formal processes or protocol for meter readers to inspect the condition of poles and enclosures.

3.2.9 Western Power Metering Services Manager

Western Power's revenue metering service manager advised that the meter readers' hand held units provide information to the meter reader about the property they are about to enter. This includes directions to locate the meter and if there are any hazards. The comments and hazards recorded are purely for the health, safety and guidance of the meter readers and they are not reviewed by Western Power. Meter readers use a volt stick to test metal meter poles and enclosures to ensure that they are not live. If they are live the meter reader reports this to Western Power and remains at the property until a faultman arrives.

3.3 Ownership of Equipment

The aerial service cable, kWh meter, meter panel and service protection fuses, are the property of Western Power. All the other equipment including the switchboard enclosure, jarrah PA pole, switchboard panel (with the main switch and three rewireable submains fuses), consumer mains cable and submains cables are the property of the owner of 180 Granite Road, Parkerville.

3.4 PA Pole

The PA pole at 180 Granite Road, Parkerville was examined and found to be a 6.7 metre-long jarrah wood pole with a diameter at its base of 215mm tapering to 135mm at the top. From the ground line marks on the pole and conduit it was established that 1.11 metres of the pole was buried in the ground.

3.5 Main Switchboard

The main switchboard at 180 Granite Road Parkerville was inspected at site and at Energy*Safety's* Cannington Office. Western Power's records indicate the property was initially connected to the distribution network in February 1970. The electrical equipment installed in the main switchboard is of the type used in the 1970s. On that basis it is concluded that the main switchboard was installed in February 1970.

Debris (leaves) was found inside the switchboard enclosure. A wasp nest was attached to the Western Power kWh meter. The electrical equipment was marked with water stains and showed signs of fading due to the effects of UV light.

The switchboard panel supporting the customer's equipment was broken. It is considered that this damaged occurred from the impact when the PA pole fell. There is no evidence that the switchboard panel was damaged prior to the bushfire.

3.5.1 Main Switchboard Door

During the site inspection on 12 January 2014 it was noted that the door was not attached to the main switchboard enclosure. It had broken off from its hinges and was lying on the ground. The interior of the main switchboard showed signs of prolonged exposure to environmental conditions.

It is evident from the UV fading of the meter this had occurred over a lengthy period.

Electrical equipment must be adequately protected against damage that may be reasonably expected from the environment and other external influences.

A main switchboard not properly enclosed is likely to become unsafe and therefore must not remain connected to the electricity supply.

Based on the evidence available it is not possible to conclude accurately how long the door was not fitted or when the UV fading occurred.

3.5.2 Western Power Revenue Meter and Service Protection Devices

A Western Power three-phase 415 volt Kilowatt-hour revenue meter (serial number 410AM 32303), was installed inside the main switchboard.

The SPD consisted of three rewireable cartridge fuses. Testing of these fuses showed that the red and white phase fuses had operated. The fuses were fitted with 0.8mm-size fuse wire, which has an approximate current rating of 30 amperes and is typical for this type of installation. The end of the fuse wire showed evidence of heat globules. This indicates they had operated under short circuit conditions.

3.5.3 Main Switch, Neutral Link and Submains

The main switch was a surface-mounted 55 ampere, 415V ac three-phase switch. The incoming side of the main switch had the active phase conductors connected out of sequence (i.e. blue, red and white). This accounted for the active red and white phase SPD fuses operating when the short-circuit fault occurred on the white and blue phase conductors of the submains. This had no bearing on the ignition of the fire.

The main switchboard panel had a back-wired neutral link fitted. The neutral conductors were effectively connected at a neutral link with a multiple-earthed neutral (MEN) connection.

The submains protection consisted of three porcelain semi-enclosed rewireable fuses rated at 55 amperes. They had a 1.2 mm diameter tinned copper fuse wire installed which has an approximate current rating of 50 amperes. None of the fuses operated and were all functional.

3.5.4 Submains Cable

The submains cable was an orange circular 4-core with earth PVC/PVC cable. The sheath extended approximately 25mm past the end of its enclosing conduit.

The submains cable was installed underground to a distribution board for the shed and house. It consisted of a circular 4-core and earth cable with 4 x 16 mm^2 active and neutral conductors and a $4mm^2$ earthing conductor.

Examination of the submains conductors, near the main switchboard entry hole, found that the insulation on the white, blue active and earth conductors had melted due to arcing as a result of a short-circuit.

3.5.5 Submains Circuit Protection

In accordance with AS/NZS3000:2007 (Wiring Rules), the submains had a current rating of 63 amperes. The 50 ampere fuses provided appropriate overload and short-circuit protection.

3.5.6 Fault Current and Discrimination Between Protection Devices

The calculated fault current at 180 Granite Road, Parkerville was 1440 Amperes. The upstream 30 ampere SPDs operated before the 50 ampere submains protection devices because there was no discrimination (i.e. submains fuses should operate before the SPDs) between the protective devices. The SPD fuses were rated at 30 amperes and the downstream submains protection fuses were rated at 50 amperes.

The SPDs operated before the submains protection fuses due to the time-current characteristics of tinned copper fuse wire.

While the SPD fuses operated before the submains protection fuses this is not unsafe. SPDs are designed to provide overload and short-circuit protection of the meter, consumer mains and the aerial service cable. They also provide an isolation point from the electricity network. Lack of discrimination for such installations is not unusual. Discrimination was not mandatory for this installation. In this instance, if a fault in the installation occurs, no discrimination between the SPDs and submains fuses will require the Network Operator to attend and replace the SPD fuse cartridges.

3.5.7 Submains Conduit

The submains 4-core and earth circular cable was installed in conduit from the bottom of the main switchboard enclosure down the PA pole and into the ground. On inspection of the conduit it was noted that it was not fixed to the pole because some of the mounting saddles had broken off. This is considered to have occurred when the PA pole fell over.

The conduit entered the metallic enclosure without a gland adapter to secure it to the enclosure (Figure 7). The use of an adapter is not mandatory. When the PA pole fell over, the conduit pulled through the hole and brought the single-insulated conductors against the sharp metallic edges of the hole (Figures 7 and 8).

Figure 7 - Photograph taken by Energy*Safety* on 12 January 2014 shows the damage to submains cable at the hole at the bottom of the main switchboard.

Figure 8 - Photograph was taken by Energy*Safety* on 12 January 2014 shows the damage caused to the submains cable as a result of metal edge damage followed by arcing due to the short-circuit occurring at the cable hole at the main switchboard enclosure.

3.6 Western Power Work Practice Standards

Western Power has developed and issued Operational Work Practice Standards (OWPS) for work on customer-owned poles.

Extracts of the OWPS are provided below.

The OWPS under the heading "*Consumer poles and meter poles*" states that:

- *"See Field instruction 6.2 (Pole – inspection and support prior to commencement of work) in this manual, for information on pole types".*
- *"**DANGER**". Consumer poles are the property of the consumer and are not subject to regular inspection by Western Power, **DO NOT** climb consumer poles".*
- *"Consumer poles are the responsibility of the consumer".*
- *"Where an existing consumer pole has been in service for some years and has deteriorated from effects of the weather, it is the responsibility of the customer to replace the pole. (Examples are wood and steel tripod and other steel types.)".*
- *"Issue a Fault note to the customer to have an electrician replace the pole".*
- *"Note: Western Power has a responsibility to the customer to notify them of the unsafe condition of a pole and to make the site safe".*

3.7 CUSA Form

A CUSA form was completed by Western Power's contractor Team Leader after the service aerial cable was replaced on 19 July 2013.

The CUSA form was not completed correctly. The leading hand ticked the boxes on the report form, recording the PA pole as "Consumer pole – structure: Metal (Round)" and "Mains Connection Box Location: Consumer Pole no Meter".

The pole was wood with a meter. The leading hand could not explain why the error occurred.

3.8 TimberED Services Pty Ltd Report and Opinion

Energy*Safety* engaged an independent timber engineering scientist, Dr Geoff Boughton of TimberED Services Pty Ltd, to assist with the investigation of the PA pole failure. He was asked to provide expert advice on the reasons for the PA pole failure and the forces acting upon it.

TimberED Services Pty Ltd provided two reports to Energy*Safety*: *"Report on Pole Failure at Parkerville 12 January, 2014"* and *"Report on Cable Loads on Pole Failure at Parkerville 12 January 2014"*.

TimberED Services Pty Ltd also provided an opinion on pole inspection methods.

Copies of both the reports and the opinion are provided in Volume 2.

An extract of the summary of findings from both reports and the opinion is provided below:

3.8.1 Report on Pole Failure at Parkerville 12 January 2014

"8. Summary of Findings[6]

The following summarises the findings of the investigation in relation to the scope of works provided by EnergySafety.

8.1. Confirm the species and dimensions of the timber pole[6]***.***

The pole was confirmed as jarrah (eucalyptus marginata)[2]. The diameter of the pole was 215 mm at the bottom of the butt, 193 mm at a cut through the cross-section at 0.85m above the bottom of the butt (0.26 m below ground-line and close to the fracture) and 135 mm at the tip. The length from bottom of the butt to the tip was estimated to be 6.68 m based on a reassembly of the sampled portions of pole.

8.2. The structural integrity of the pole at the time of failure and determine if the pole had the structural strength to bear design loads exerted on it in the manner it was being used[6]***.***

The section of the pole immediately above the failure was lost during the fire. Only the fracture surface of the butt portion of the pole, and cut cross-sections either side of the failure location could be examined.

The residual capacity of the pole was calculated at the failure location from the remaining good wood on the fracture surface visible on the top of the butt. It was estimated for a number of different neutral axis orientations using a range of wood fibre stresses.

The notional design moment for the pole was evaluated for wind speeds with a 1/50 annual probability of exceedance.

The minor axis of the residual wood in the pole failure cross section was found for a neutral axis orientations of 122°. The capacity at that orientation was 6.5% of the notional design moment for fibre strengths of 10 MPa, 9.8% for 15 MPa (the likely range of fibre strengths for this 40 year old pole with rot present). However, if the fibre strength was 42 MPa, (more appropriate for a pole with no rot) then the minor axis capacity of the pole was only 27.4% of the notional design moment. Therefore, regardless of the actual fibre strength of the remaining wood at the fracture surface, the pole capacity was significantly less than the notional design moment.

8.3. Any evidence of the pole having been treated, reinforced or other maintenance works prior to failure[6]***.***

No evidence of treatment was found in any of the recovered sections of the pole. Normal pole reinforcement had not been used. A short length of pipe found near the pole was not effective reinforcement. There were no signs of recent maintenance in any of the recovered sections.

8.4. Evidence of any defects contributing to any deterioration in structural strength including insect infestation, fungal activity and other timber defects[6].

Observation of the top of the butt section (approximately 170 mm below the ground-line) showed a fracture surface that had been preserved from fire damage. The centre of the cross-section had been damaged or removed by rot and termites. Much of the external part of the cross-section had also been compromised. Only three small sections of wood fibre that showed characteristics of structural failure remained.

The damage to the section reduced the residual section modulus to around 3.5% of its original value. This is the major reason for the reduction in the capacity of the pole as described in Section 6.2[6].

8.5. What caused the pole to topple and any possible external loading on the pole greater than the design load[6].

Section 6.3.2[6] indicated that the pole failed under a combination of a northerly wind and tension in the service cable. The resultant of these actions caused a moment aligned with the minor axis of the residual wood fibre at the failure location.

Analysis of meteorological data suggested that the gust that contributed to the failure was around 22% of the notional design wind speed. The lack of damage to trees in the immediate area is compatible with winds significantly less than the notional design wind speed.

Forensic evaluation using the fall direction, properties of the residual cross-section and wind data suggest that the tension in the service cable was in the range 0.02 to 0.09 kN.

The pole toppled at loads less than the notional design load due to reduced capacity as indicated in Sections 8.2[6] and 8.4[6]. Its capacity was also significantly less than the estimated capacity of the as-new pole as calculated in Section 5.5[6].

8.6. What were the failure modes involved in this pole failure[6].

The pole failed in bending at a depth of approximately 170 mm below the ground- line due to reduced section modulus at that location following extensive removal of wood fibre by termites and rot."

[6] Reference to TimberED Services Pty Ltd Report in Volume 2.

Figure 9 - Photograph taken by Energy*Safety* on 21 January 2014 shows the fracture of the PA Pole and the reduced effective cross section (approximately 3.5% of its original section modulus) as a result of termites and fungal decay.

3.8.2 Report on Cable Loads on Pole Failure at Parkerville 12 January, 2014

"6. Summary of Findings[6]

6.1. Relationships between cables and poles for everyday operation[6]***.***

Tensions under everyday loads in the service cable were not sufficient to cause failure of the pole.

6.2. Relationships between cables and poles during replacement of Pole 252261[6]***.***

A number of different scenarios were considered. In each of them, the tension in the service cable would have increased marginally, but for an initial angle of lean of the Consumer's Pole greater than 1°, the increase in tension was less than around 15% of the everyday tension.

The calculated tension in the service cable during the replacement of Pole 252261 was less than half the calculated residual capacity of the Consumer's Pole (for an initial angle of lean greater than 1°) in resisting forces aligned with the service cable.

Had the tension in the service cable during the replacement of Pole 252261 exceeded the capacity of the Consumer's Pole, it would have failed on 10 January 2014, and the tension in the service cable would have pulled the top of the Consumer's Pole to the west. Its final resting position after failure would have been to the north of the square pole. As the resting position of

the Consumer's Pole shown in Figure 1[6] was to the south of the square pole, the failure cannot have been caused by tension in the service cable caused by the replacement of Pole 252261.

6.3. Transfer of loading during construction works with respect to design capacity of the pole[6].

While the Consumer's Pole may not have been designed to resist specific load cases, had the pole been designed in accordance with AS/NZS 7000 [4], the notional design loads gave a capacity that would have been able to resist at least seven times the load calculated in the service cable during replacement of Pole 252261".

3.8.3 Opinion on the Pole Inspection Methods

"1. Is there a recommended industry inspection method for the inspection of jarrah wood poles to determine if the pole is of adequate strength at its ground line? If so, what is this inspection method.

Both Western Power and Horizon Power have developed processes to inspect in-service jarrah utility poles to indicate whether the condition of the pole at ground line is appropriate for continued unreinforced service. Both these methods involve a visual inspection of the pole and non-destructive evaluation. In both cases, sounding with a hammer is used to detect areas on the pole that require further investigation. The non-destructive evaluation method adopted by Western Power uses a pick to estimate the depth of 'good wood' in inclined and horizontal holes near the ground line. Horizon Power uses a PortaScan device to estimate the extent of remaining 'good wood' in a cross section near ground line. The estimated capacity is calculated using the remaining 'good wood' cross-section and an assumed strength of the residual wood. It is then compared with the design bending moment evaluated using AS/NZS 7000 to determine the serviceability of the pole at ground line. The only way to definitively determine the strength of the pole at ground-line is by destructive testing. However, the inspection methods described in this question can be used to estimate the extent of 'good wood' in the ground line region. This information is used with other factors such as the age of the pole to estimate whether the pole is still serviceable. These methods are based on structural engineering analysis of deteriorated sections and conservatism can be built into assessments to accommodate variability in measuring cross section and in estimating the fibre strength of the 'good wood'. Because deterioration mechanisms for timber poles vary with timber species, the inspection processes that have been developed for jarrah poles differ from those used for other hardwood species in other states.

2. Is the inspection method, as described above and used by the Western Power contractor, adequate to determine the ground line strength of the pole and that it is still serviceable? If it is or is not why?

The inspection method described and demonstrated by the contractor is not a measurement technique and cannot be used to determine the strength of the pole or the extent of 'good wood'. However, even when tapping small poles lightly as shown on the video, the changes in sounds can indicate areas of a pole that show signs of significant internal deterioration. Operators experienced in interpreting these sounds can identify poles that have areas of weakness and would therefore have an elevated risk of failure under service

loads. Also, serviceability criteria are not explicitly defined for consumer poles, so even if the strength had been evaluated, it would be difficult to numerically assess serviceability.

3. If the pole was inspected on the 19 July 2013 as claimed, would it have been possible to observe the rot and white ant damage to the pole?

As indicated in 'Report on Pole Failure at Parkerville 12 January, 2014', the maximum depth of 'good wood' anywhere on the circumference of the pole at a depth of 170 mm below ground line, was 12 to 15 mm. In some places, it may have been 1 mm or less. The cavity in the centre of the pole had been excavated by termites and while the wood at ground line had been lost in the fire, the report showed that the top of the cavity was detected 190 mm above ground line. If a cavity of this size was in a pole that was struck by a hammer as shown in the video, at best the sound immediately over the cavity would have been 'drummy', and at worst the hammer would have penetrated the pole. It is my opinion that the extent of the termite damage in July 2013 would not have been significantly different to that observed in January 2014, and that an inspection in July 2013 using sounding at a depth of 200 to 300 mm below ground would have detected the internal cavity. Jarrah heartwood is classified as 'termite resistant', but termites can attack wood that has been compromised by fungal activity. Therefore in my opinion it is likely that the excavation of the large cavity in the centre of the pole near ground line by the combination of termites and fungi would have occurred over years rather than months. The size of the cavity in the pole in July 2013 would have only been a few millimetres smaller than that observed and measured in January 2014. It is my opinion that inspection of the pole by sounding in the manner described by the Western Power contractor in July 2013 should have indicated that there was a significant reduction in the quality of the wood in the pole just below the ground line. In addition, clay deposits in checks and cracks over the length of the pole were observed during inspection of the pole in January 2014. These deposits indicate termite activity and were extensive enough to have been established over a number of years. Some of these were visible near the top of the pole, which would also have been visible to a contractor connecting a new cable to the pole in July 2013.

4. If there is a recommended industry inspection method would this inspection determine the adequacy of the ground line strength of the pole and that it is still serviceable on 19 July 2013? If it is or is not why?

The non-destructive testing used by both Western Power and Horizon Power (the only practices regularly used on jarrah poles and outlined in the response to question 1) would both have detected large cavities of the type and size observed on the pole in January 2014. In my opinion, the size of the cavity in the pole in July 2013 was likely to have been only fractionally smaller than that measured in January, 2014. Both methods would have indicated that the pole had low residual strength at ground line. The evaluation of serviceability compares the residual strength against the strength required to resist the expected design service loads. It is unclear what the design loads for a consumer's pole are, as they do not have to comply with AS/NZS 7000. However, the commonly used industry inspection methods for jarrah poles would have indicated a very low strength that would not have resisted the AS/NZS 7000 loads (Refer to section 6 of the 'Report on Pole Failure at Parkerville 12 January, 2014'.)

5. Given its location and soil conditions what is the in-ground service life of the failed Parkerville untreated jarrah pole?

It is my opinion that the average service life of a 200 mm diameter untreated jarrah pole in the Parkerville area is between 25 and 40 years where the deterioration is caused by normal fungal attack. This opinion is based on:

- *Table 4.3 Forest and Wood Products Australia, 2012, 'Timber Service Life Design Guide #05' and*
- *data from in-service jarrah pole tests by Western Power and Horizon Power.*

In this context, around 50% of the poles could be expected to last longer than the average service life, and appropriate inspection techniques can be used to identify those poles as their age approaches 20 years.

However, these estimates are based only on the reduction of safety factors by fungal attack and termite activity has the potential to reduce the service life of jarrah poles by removing wood that has been affected by rot and encouraging further fungal deterioration."

3.9 Entomologist Report

Energy*Safety* engaged Peter Davis, an independent Entomologist from Davis Consultants, to provide a report into the inspection of the PA pole to determine if termite or fungal activity could have been involved in its failure. He was also requested to include in the report expert advice on the presence of termites within the PA pole, confirmation of the specie or species, the likely period termites have been present and the damage caused by them.

Davis Consultants provided a report to Energy*Safety* entitled: *"Report into Inspection of Consumer's Point-of-Supply Power Pole from 180 Granite Road, Parkerville to Determine if Termite or Fungal Activity was involved in its Structural Failure".* A copy of the report is provided in Volume 2.

An extract of the findings from the report is provided below:

"In terms of the 'scope of works' for this report, my findings are as follows:

a) Confirm the presence of termites in the pole.

Termites were active in the pole.

b) If termites were present, confirm the specie or species of termite(s).

Termitidae, Microcerotermes newmani. There was also evidence of previous infestation by Coptotermes sp.

c) Assessment of the likely period termites were present in the pole.

In excess of a year.

d) The likelihood of termite activity causing damage to the pole.

Damage to the pole was done by both Termitid and Rhinotermitid termites.

e) *Assess the probability that termite damage affected the structural integrity of the timber pole or any invasion of fungal growth contributed to the pole failing.*

In my opinion, the most probable cause of failure of the pole was a combination of both fungal and termite damage. The fungal infection would have preceded the termite attack".

Figure 10 - Photograph taken by Energy*Safety* on 24 January 2014 shows a section of the PA pole, 1m above the ground, the effects and workings of termites.

Figure 11 - Photograph taken by Energy*Safety* on 24 January 2014 shows a gallery of termites in a section of the PA pole.

3.10 Responsibilities for Private Power Poles

Following the fire caused by a private power pole failing at Chidlow in December 2012, Energy*Safety* produced a pamphlet advising property owners about their responsibility to maintain private power poles. The pamphlet provides guidance on the serviceability of wooden jarrah poles and its content was applicable to the installation at 180 Granite Road, Parkerville.

This pamphlet was made available on Energy*Safety's* web page and distributed by Western Power and Horizon Power to large rural properties with more than one private power pole. It was not sent to 180 Granite Road, Parkerville as this property was not considered large and only had one privately owned power pole. A copy of the pamphlet is provided in Volume 2.

Following the Parkerville bushfire the pamphlet was revised and now includes additional diagrams which cover the most common arrangements where private poles are installed including single pole installations. A copy of the revised pamphlet is provided in Volume 2.

4. WEATHER

The following weather details were provided by the Bureau of Meteorology for 12 January 2014.

4.1 Bickley, Western Australia Daily Weather Observations

Overall					
Temperature		Max Wind Gust			Rain
Min	Max	Direction	Speed	Time	
23.9°C	40.3°C	East	46 km/h	00:01hrs	Nil

At 9am			
Temperature	Wind		Relative Humidity
	Direction	Speed	
33.8°C	NNE	11km/h	26%

At 3pm			
Temperature	Wind		Relative Humidity
	Direction	Speed	
33.9°C	WSW	20km/h	25%

4.2 Perth Airport, Western Australia Daily Weather Observations

Overall					
Temperature		Max Wind Gust			Rain
Min	Max	Direction	Speed	Time	
28.5°C	43.0°C	East	61 km/h	02:13hrs	Nil

At 9am			
Temperature	Wind		Relative Humidity
	Direction	Speed	
39.4°C	N	22km/h	12%

At 3pm			
Temperature	Wind		Relative Humidity
	Direction	Speed	
34.7°C	SW	33km/h	26%

5. WESTERN POWER'S INVESTIGATION REPORT

Western Power conducted its own investigation into the incident and concluded that:

- The PA pole[7] had failed and fallen causing damage to the insulation of the consumer's three phase submains cable.

- The damage to the insulation exposed the live conductors of the cable which in turn led to electrical arcing between the cable's conductors and an earthed steel meter box which was also fixed to the PA pole.

- The sparks from the electrical arcing ignited the dry grass and vegetation on the ground surrounding the base of the PA pole, starting the bush fire.

- The failure of the PA pole was due to inadequate maintenance.

[7] Western Power in its report uses the term "Consumer Pole"

6. CONCLUSION

The PA pole failed at ground level and fell in a westerly direction at approximately 10:45 hours on 12 January 2014. This caused the customer's submains cable to pull through the hole at the bottom of the main switchboard enclosure. This action caused damage to the insulation on the conductors from the sharp metal edges around the hole.

As a result a short-circuit occurred providing sufficient fault current to melt the copper submains conductors and the metallic main switchboard enclosure. This produced hot metal globules that fell to the ground and ignited vegetation at the base of the PA pole.

The PA pole failed due to extensive damage from termites and fungal decay (rot).